IFNU231, IFNU232, IFNU233 Dual Matched N-Channel JFET

Features

- InterFET N0016H Geometry
- Low Leakage: 10 pA Typical
- Low Input Capacitance: 3.5 pF Typical
- High Input Impedance
- Replacement for U231, U232, U233
- RoHS Compliant
- SMT, TH, and Bare Die Package options.

TO-71 Bottom View

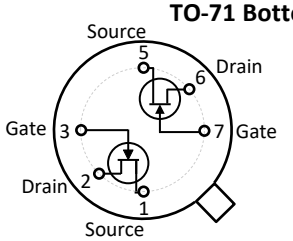

Applications

- Low Noise Differential Amplifier
- Differential Amplifier
- Wide-Band Amplifier

SOIC8 Top View

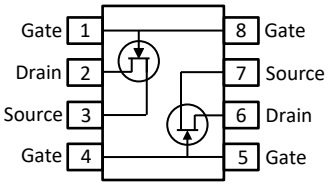

Description

The -50V InterFET IFNU231, IFNU232, and IFNU233 JFET's are targeted for low noise differential amplifier designs. Gate leakages are less than 10pA at room temperatures. The TO-71 package is hermetically sealed and suitable for military applications. Custom specifications, matching, and packaging options are available.

Product Summary

Parameters		IFNU231 Min	IFNU232 Min	IFNU233 Min	Unit
BV_{GSS}	Gate to Source Breakdown Voltage	-50	-50	-50	V
I_{DSS}	Drain to Source Saturation Current	0.5	0.5	0.5	mA
$V_{GS(off)}$	Gate to Source Cutoff Voltage	-0.5	-0.5	-0.5	V
G_{FS}	Forward Transconductance	0.6	0.6	0.6	mS

Ordering Information Custom Part and Binning Options Available

Part Number	Description	Case	Packaging
IFNU231; IFNU232; IFNU233	Through-Hole	TO-71	Bulk
SMPU231; SMPU232; SMPU233	Surface Mount	SOIC8	Bulk
SMPU231TR; SMPU232TR; SMPU233TR	7" Tape and Reel: Max 500 Pieces 13" Tape and Reel: Max 2,500 Pieces	SOIC8	Minimum 500 Pieces Tape and Reel
IFNU231COT; IFNU232COT; IFNU233COT *	Chip Orientated Tray (COT Waffle Pack)	COT	70/Waffle Pack
IFNU231CFT; IFNU232CFT; IFNU233CFT *	Chip Face-up Tray (CFT Waffle Pack)	CFT	70/Waffle Pack

* Bare die packaged options are designed for matched specifications but not 100% tested

Disclaimer: It is the Buyers responsibility for designing, validating and testing the end application under all field use cases and extreme use conditions. Guaranteeing the application meets required standards, regulatory compliance, and all safety and security requirements is the responsibility of the Buyer. These resources are subject to change without notice.

Electrical Characteristics

Maximum Ratings (@ T_A = 25°C, Unless otherwise specified)

Parameters		Value	Unit
V_{RGS}	Reverse Gate Source and Gate Drain Voltage	-50	V
I_{FG}	Continuous Forward Gate Current	50	mA
P_D	Continuous Device Power Dissipation	300	mW
P	Power Derating	4.3	mW/°C
T_J	Operating Junction Temperature	-55 to 125	°C
T_{STG}	Storage Temperature	-65 to 150	°C

Static Characteristics (@ TA = 25°C, Unless otherwise specified)

Parameters		Conditions	IFNU231, IFNU232, IFNU233		Unit
			Min	Max	
$V_{(BR)GSS}$	Gate to Source Breakdown Voltage	V_{DS} = 0V, I_G = -1µA	-50		V
I_{GSS}	Gate to Source Reverse Current	V_{GS} = -30V, V_{DS} = 0V, T_A = 25°C V_{GS} = -30V, V_{DS} = 0V, T_A = 150°C		-100 -500	pA nA
$V_{GS(OFF)}$	Gate to Source Cutoff Voltage	V_{DS} = 20V, I_D = 1nA	-0.5	-4.5	V
V_{GS}	Gate to Source Voltage	V_{DS} = 20V, I_D = 200µA	-0.3	-4	V
I_{DSS}	Drain to Source Saturation Current	V_{DS} = 20V, V_{GS} = 0V (Pulsed)	0.5	5	mA
I_G	Gate Current	V_{DS} = 20V, I_D = 200µA, T_A = 25°C V_{DS} = 20V, I_D = 200µA, T_A = 125°C		-50 -250	pA nA

Dynamic Characteristics (@ TA = 25°C, Unless otherwise specified)

Parameters		Conditions		IFNU231, IFNU232, IFNU233		Unit
				Min	Max	
G_{FS}	Forward Transconductance	V_{DS} = 20V, I_D = 200µA, f = 1kHz		0.6	1.6	mS
G_{OS}	Output Conductance	V_{DS} = 20V, I_D = 200µA, f = 1kHz			10	µS
C_{iss}	Input Capacitance	V_{DS} = 20V, V_{GS} = 0V, f = 1MHz			6	pF
C_{rss}	Reverse Transfer Capacitance	V_{DS} = 20V, V_{GS} = 0V, f = 1MHz			2	pF
e_n	Equivalent Circuit Input Noise Voltage	V_{DS} = 20V, V_{GS} = 0V, f = 100Hz			80	nV/√Hz
$\lvert V_{GS1} - V_{GS2} \rvert$	Differential Gate Source Voltage	V_{DS} = 20V, I_D = 200µA	IFNU231 IFNU232 IFNU233	5 10 15		mV
$\frac{\lvert V_{GS1} - V_{GS2} \rvert}{\Delta T}$	Differential Gate Source Voltage with Temperature	V_{DS} = 20V, I_D = 200µA, T_A = -55°C, T_B = 25°C, T_C = 125°C	IFNU231 IFNU232 IFNU233	1 2.5 4		mV/°C

SOIC8 Mechanical and Layout Data

Package Outline Data

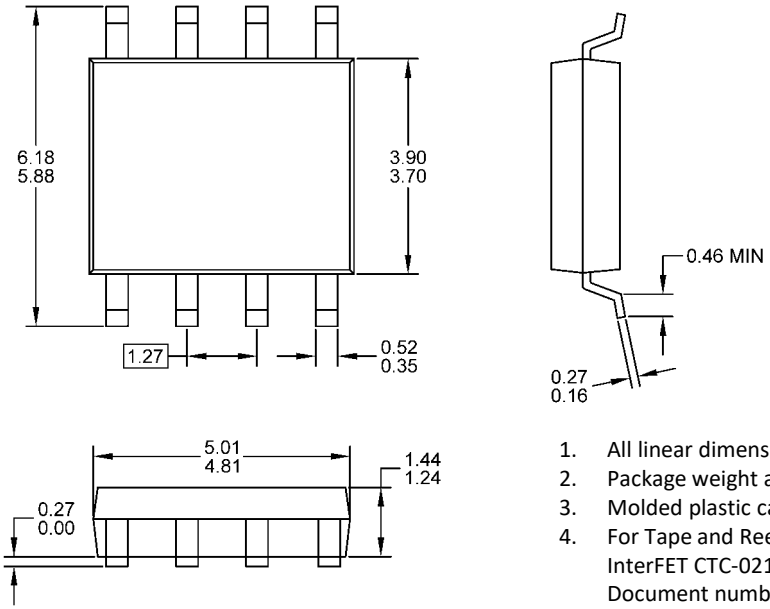

1. All linear dimensions are in millimeters.
2. Package weight approximately 0.21 grams
3. Molded plastic case UL 94V-0 rated
4. For Tape and Reel specifications refer to InterFET CTC-021 Tape and Reel Specification, Document number: IF39002
5. Bulk product is shipped in standard ESD shipping material
6. Refer to JEDEC standards for additional information.

Suggested Pad Layout

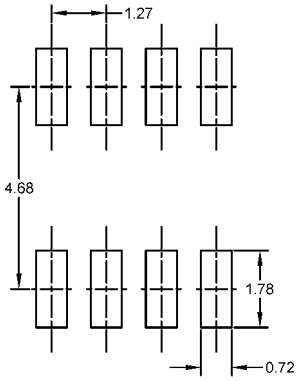

1. All linear dimensions are in millimeters.
2. The suggested land pattern dimensions have been provided for reference only. A more robust pattern may be desired for wave soldering.

TO-71 Mechanical and Layout Data

Package Outline Data

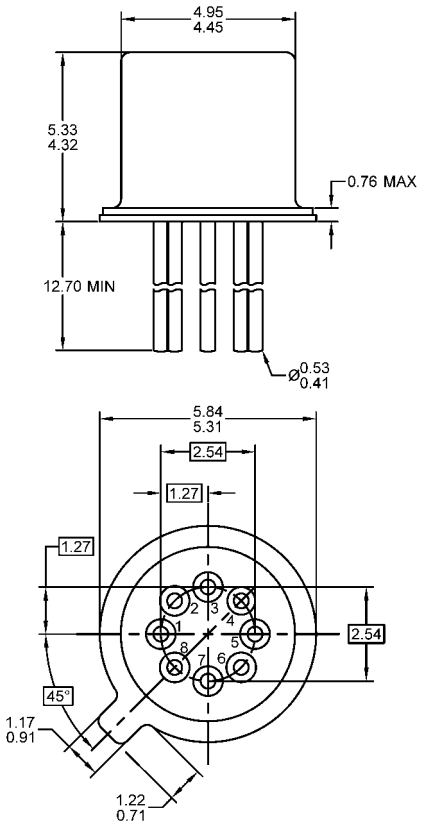

1. All linear dimensions are in millimeters.
2. Eight leaded device. Not all leads are shown in drawing views.
3. Some package configurations will not populate pin 8 and/or pin 4.
4. Package weight approximately 0.35 grams
5. Bulk product is shipped in standard ESD shipping material
6. Refer to JEDEC standards for additional information.

Suggested Bent Lead Through-Hole Layout

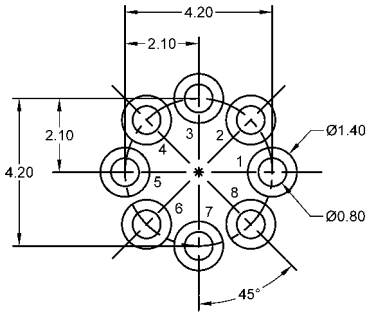

1. All linear dimensions are in millimeters.
2. Pads 8 and/or pad 4 can be eliminated for devices with less pins.
3. The suggested land pattern dimensions have been provided as an eight pin bent lead reference only. A more robust pattern may be desired for wave soldering or reduced pin count.